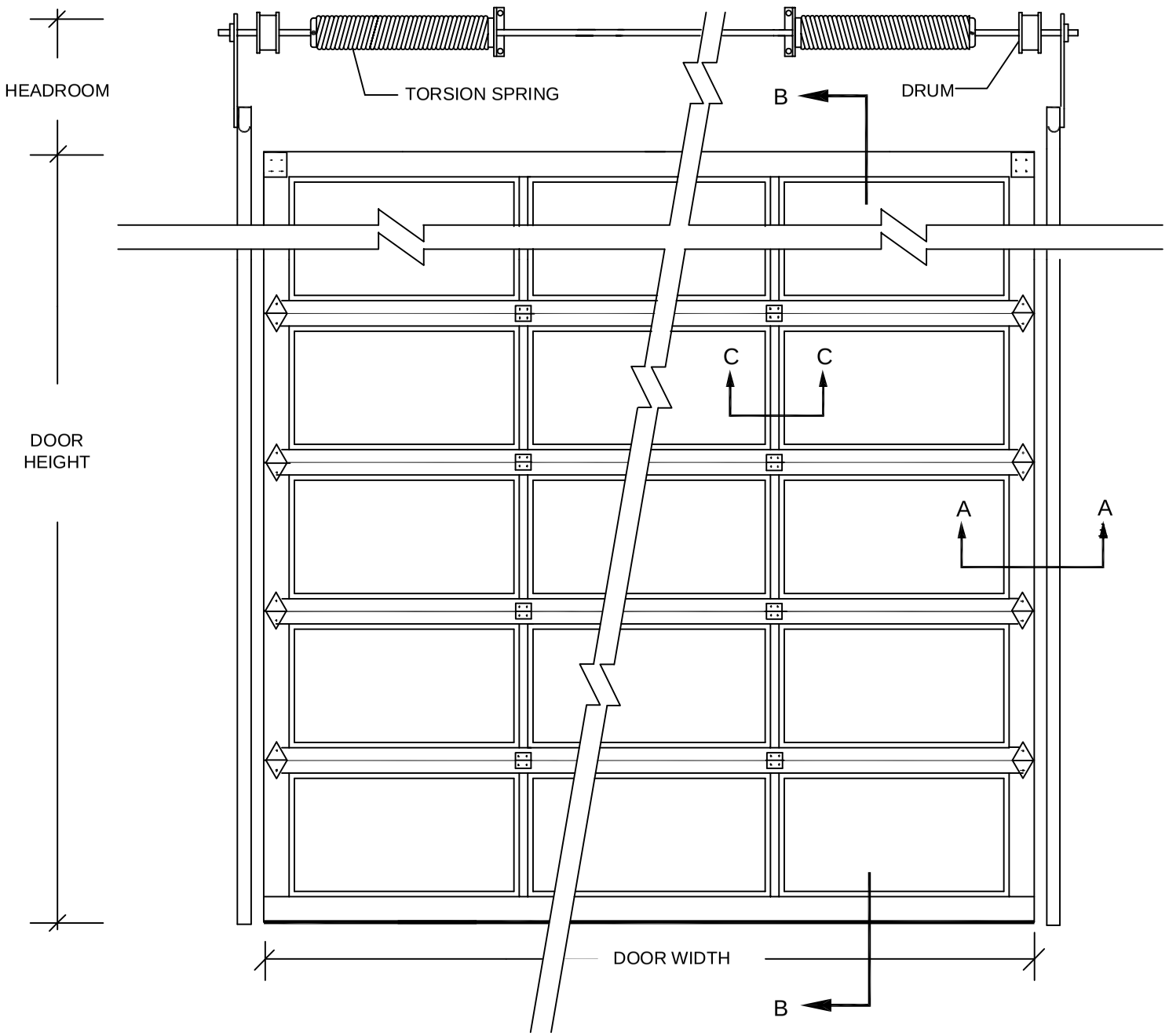

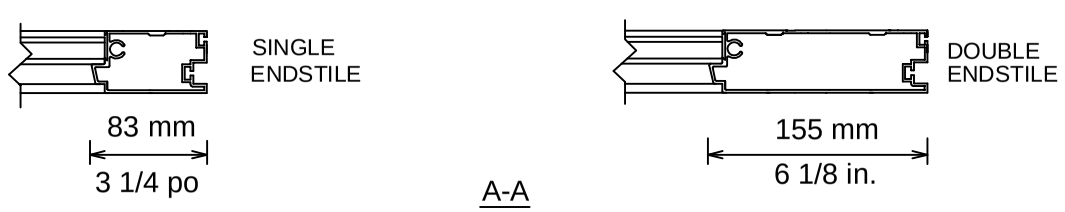

A-A

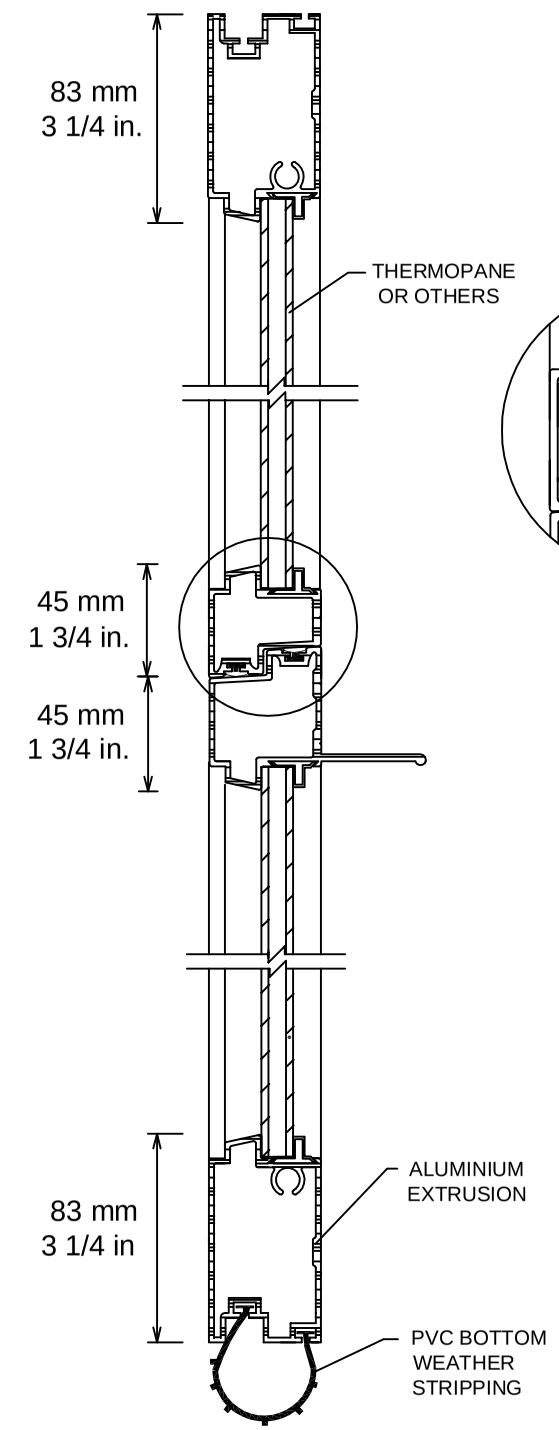

B-B

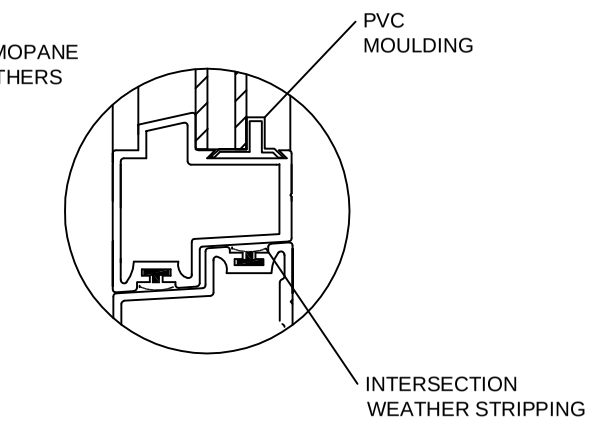

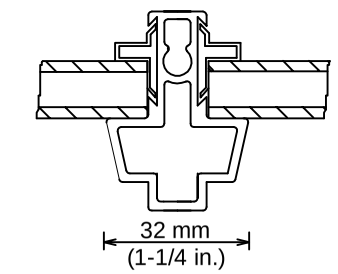

C-C

Door model : G4000
Thickness : 45mm (1-3/4")
Frame color :
Glass Type :
Solid Sections :

GARAGA INC.

PAGE : 1 OF 2

OVERHEAD GARAGE DOOR
G-4000 SERVICE STATION

PROJECT:

DISTRIB. :

ARCHITECT:

CONTRACTOR:

DATE :

# DOOR	QTY	WIDTH	HEIGHT	NB OF SECTIONS	DOUBLES ENDSTILES	GLAZED SECTIONS		SOLID SECTIONS		OPERATION	OPTIONS
						# SECTIONS	PANES / SECT	# SECTIONS	PANELS / SECT		