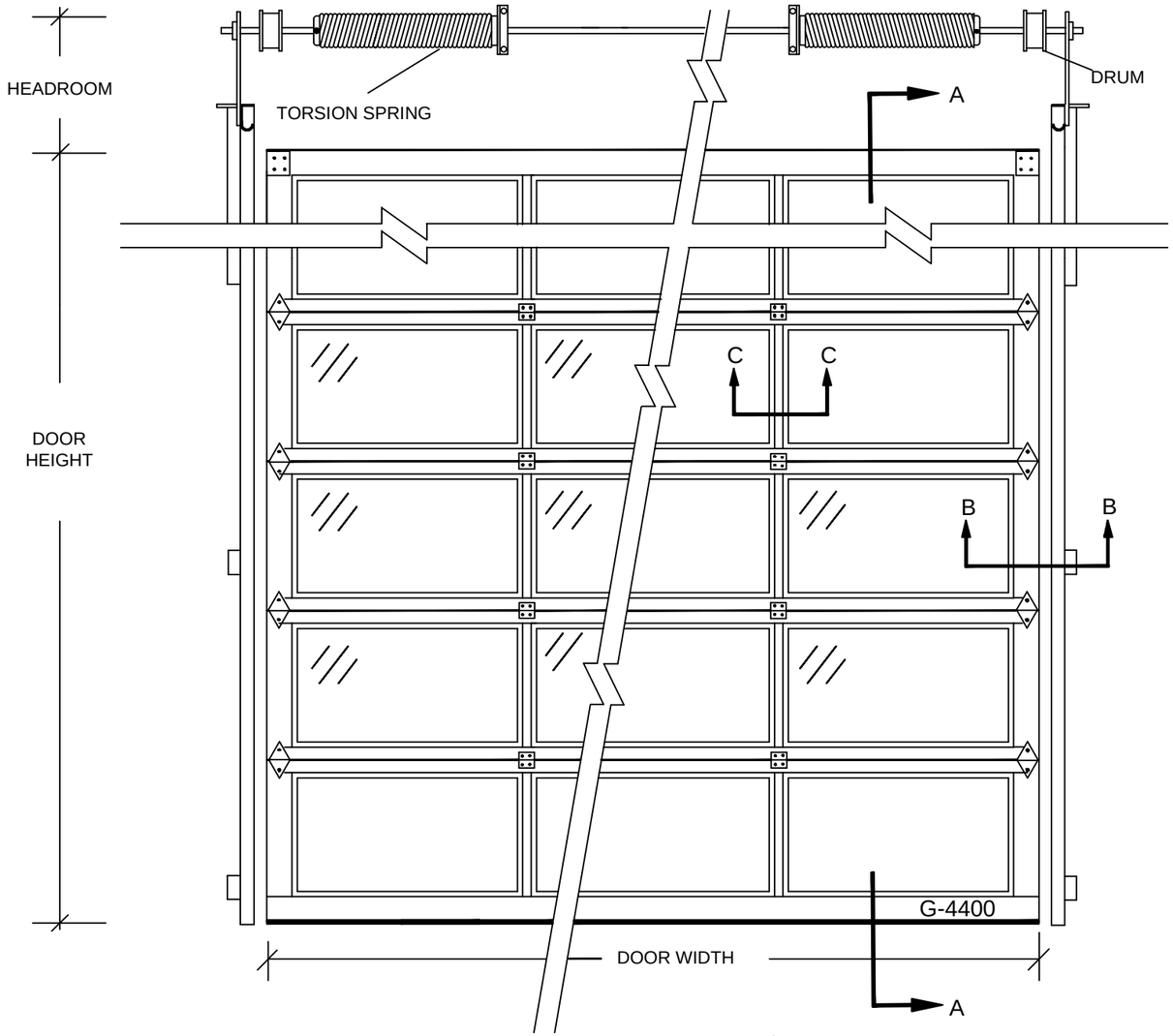

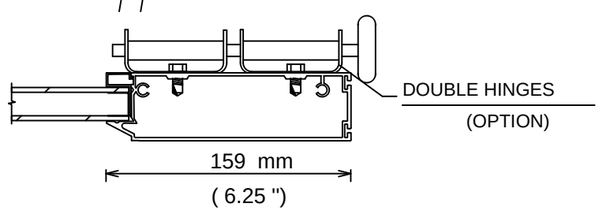

B-B

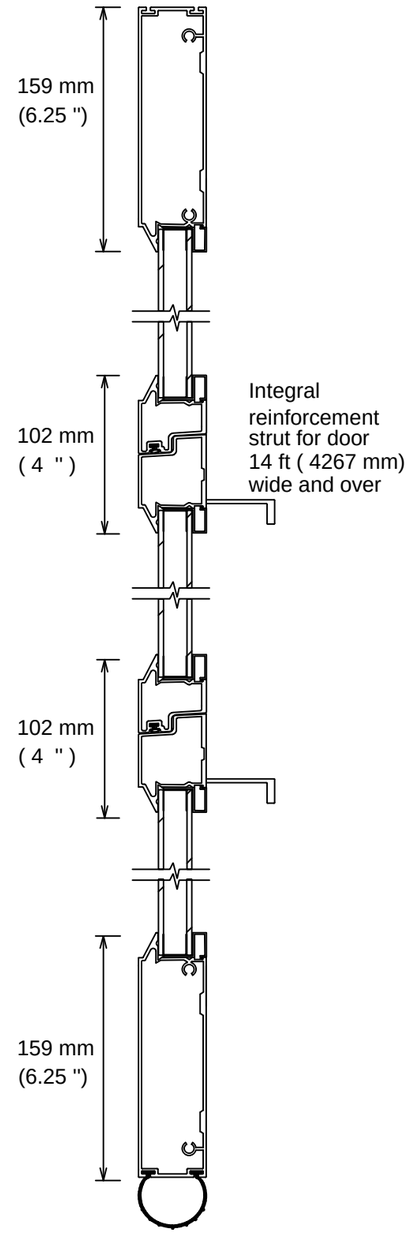

A-A

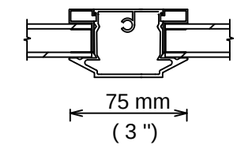

C-C

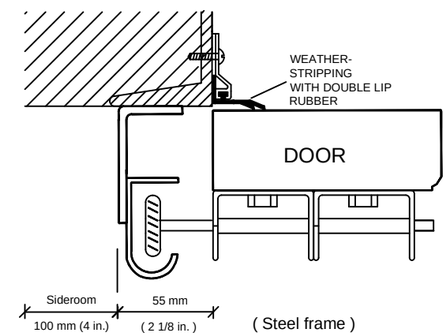

(Steel frame)

PAGE : OF

# DOOR	QTY	MODEL	DOOR SIZE		QTY OF SECTIONS	ALUMINIUM FRAME		GLAZED SECTIONS			SOLID SECTIONS			OPTIONS
			WIDTH	HEIGHT		COLOUR	DOUBLE HINGES	MODEL	# SECTIONS	QTY / SECT.	MODEL	# SECTIONS	QTY / SECT.	

NO: DATE : REVISION :

TITRE :

OVERHEAD GARAGE DOOR
G-4400, SERVICE STATION

GARAGA INC.
8500, 25 Avenue, St-Georges (Qc), Canada
G6A 1K5 Tel:(418)227-2828 Fax:(418)227-5508

PROJECT:

INSTALLER :

ARCHITECT:

GEN. CONTRACTOR:

DATE : DRAWN BY: VERIFIED BY: